EPC-19 R-GO C2

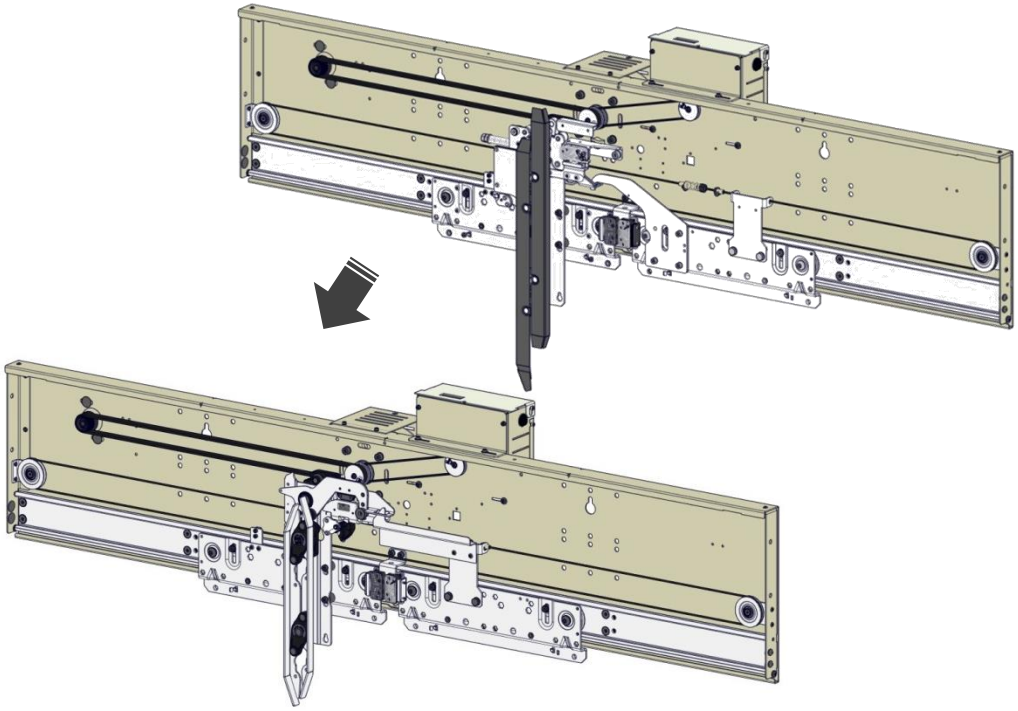

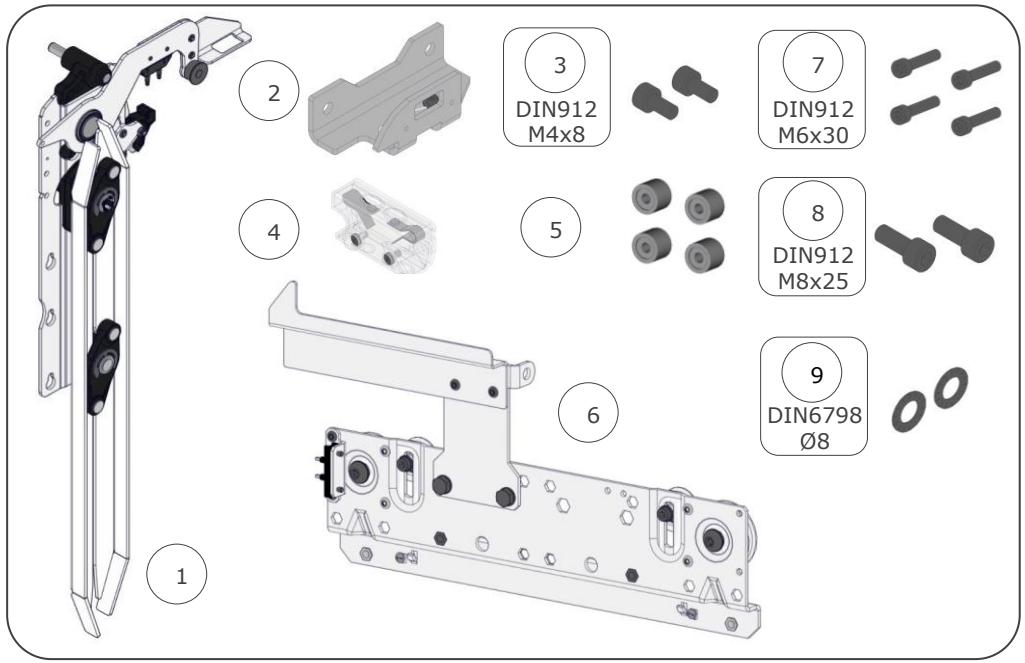

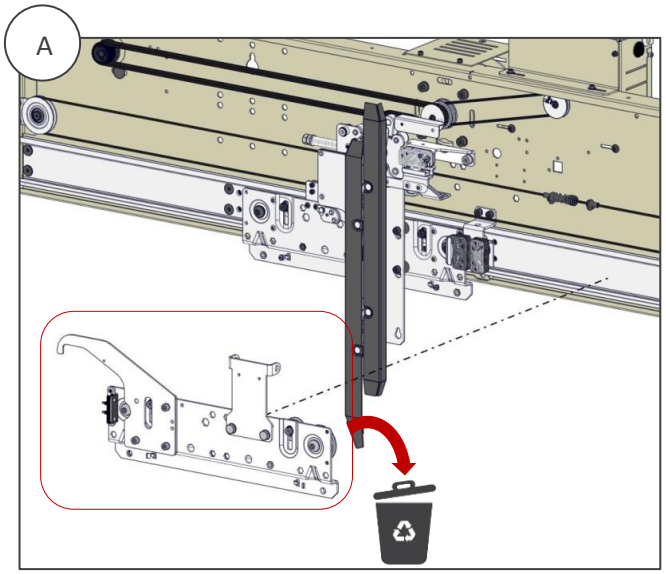

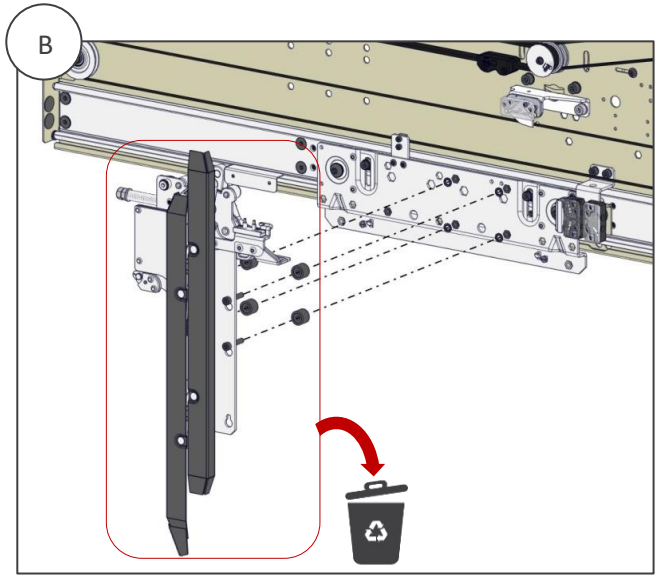

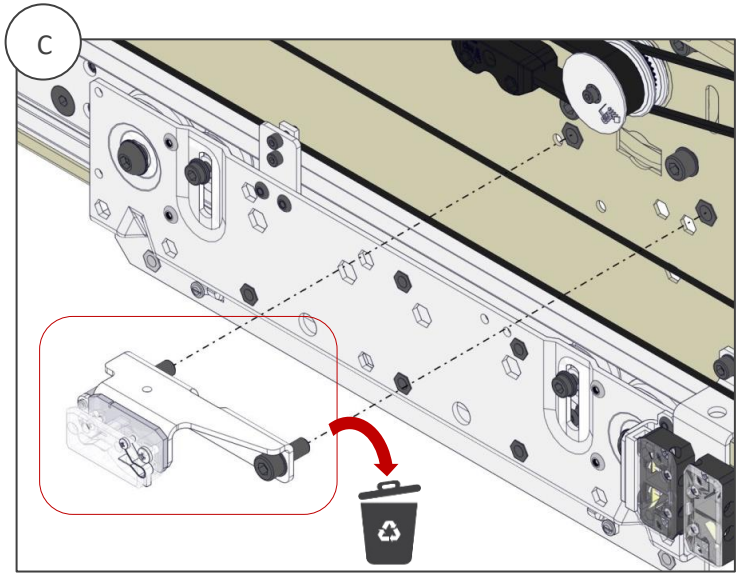

mp moving people

D

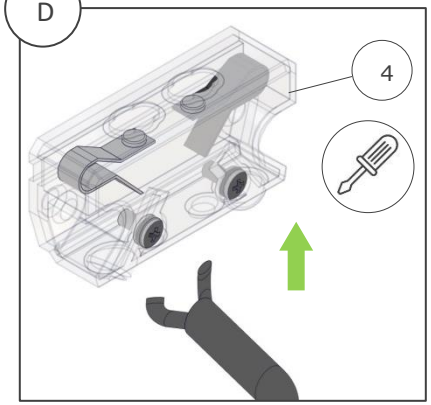

E

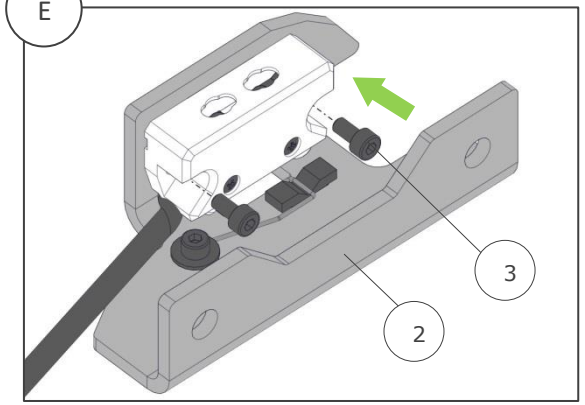

F

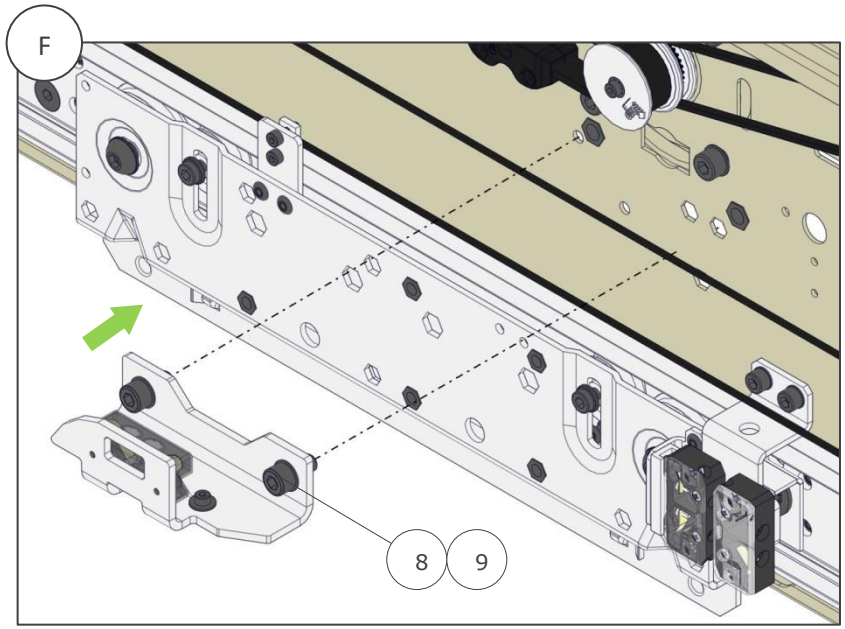

G

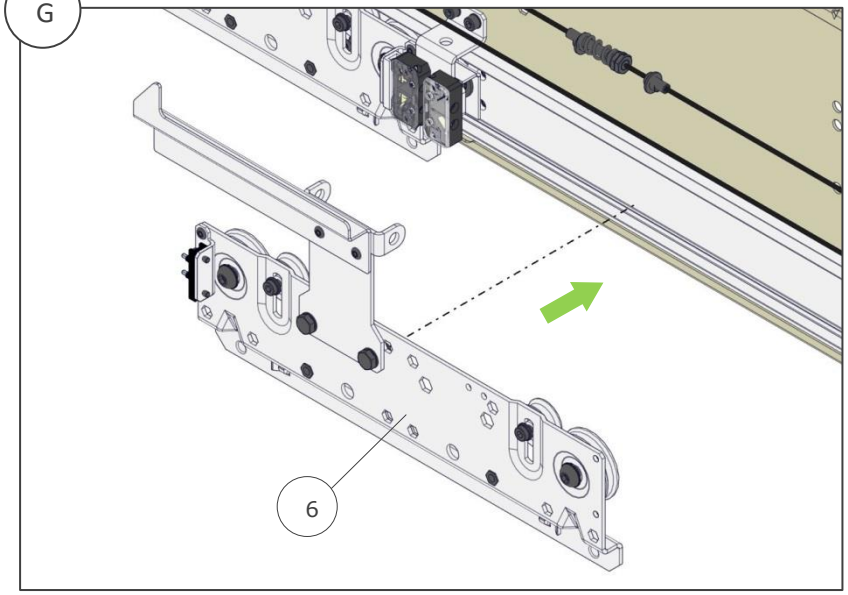

H

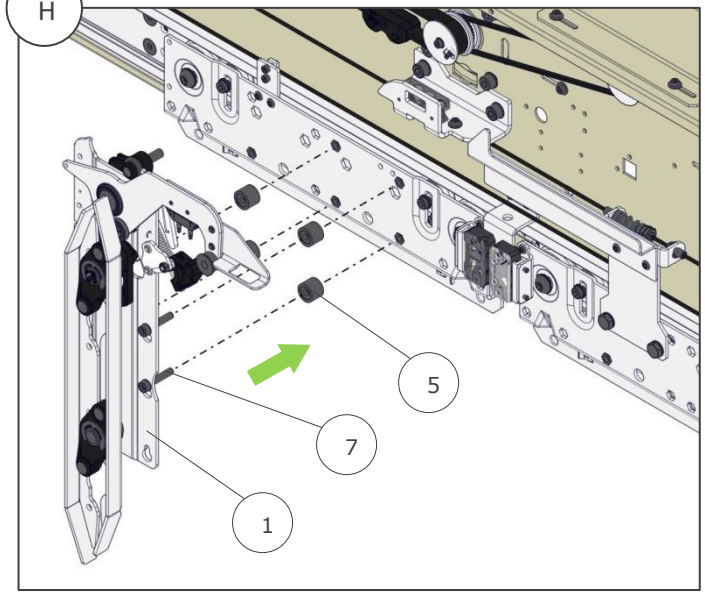
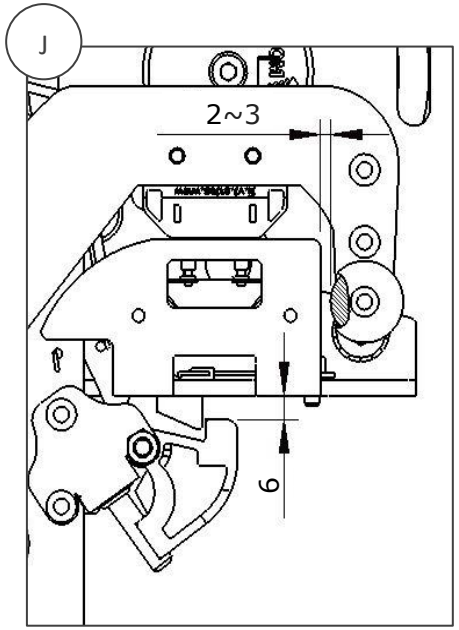
J